BEDIENUNG UND INSTALLATION
OPERATING AND INSTALLATION
UTILISATION ET INSTALLATION
GEBRUIK EN INSTALLATIE
OBSŁUGA I INSTALACJA
OBSLUHA A INSTALACE

Elektronisch geregelter Durchlauferhitzer | Electronically controlled instantaneous water heater | Chauffe-eau instantanés à régulation électronique | Elektronisch geregelde doorstromer | Elektronicznie regulowany przepływowy ogrzewacz wody | Elektronicky regulovaný průtokový ohřívač

- DHB-E 11 SLi electronic
- DHB-E 13 SLi electronic
- DHB-E 18 SLi 25 A electronic
- DHB-E 18/21/24 SLi electronic
- DHB-E 27 SLi electronic

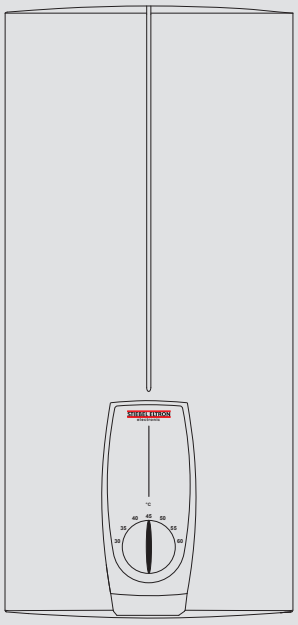

STIEBEL ELTRON

CONTENTS

SPECIAL INFORMATION

OPERATION

1. General information 20
1.1 Safety instructions 20
1.2 Other symbols in this documentation 20
1.3 Units of measurement 21

2. Safety 21
2.1 Intended use 21
2.2 General safety instructions 21
2.3 Test symbols 21

3. Appliance description 21

4. Operation 21
4.1 Recommended settings 22
4.2 Temperature limit / Anti-scalding protection 22

5. Cleaning, care and maintenance 22

6. Troubleshooting 22

INSTALLATION

7. Safety 23
7.1 General safety instructions 23
7.2 Instructions, standards and regulations 23

8. Appliance description 23
8.1 Standard delivery 23
8.2 Accessories 23

9. Preparations 24
9.1 Installation site 24
9.2 Water installation 24
9.3 Appliance with adjustable connected load 25

10. Installation 25
10.1 Standard installation 25
10.2 Completing the installation 27

11. Commissioning 27
11.1 Initial start-up 27
11.2 Recommissioning 28

12. Shutdown 28

13. Installation options 28
13.1 Electrical connection from above on unfinished walls 28
13.2 Electrical connection on finished walls 28
13.3 Large conductor cross-section for electrical connection from below 28
13.4 Connecting a load shedding relay 29
13.5 Water installation on finished walls 29
13.6 Water installation on finished walls with solder / compression fitting 29
13.7 Water installation on finished walls; fitting the appliance cover 29
13.8 Fitting the base part of the back panel with threaded fittings on finished walls 29
13.9 Wall mounting bracket when replacing an appliance 30
13.10 Installation with offset tiles 30
13.11 Pivoting appliance cover 30
13.12 Temperature limit / Anti-scalding protection 30

14. Troubleshooting 31

15. Maintenance 32

16. Specification 32
16.1 Dimensions and connections 32
16.2 Wiring diagram 32
16.3 DHW output 33
16.4 Application areas / conversion table 33
16.5 Pressure drop 33
16.6 Details on energy consumption 33
16.7 Data table 34

GUARANTEE

ENVIRONMENT AND RECYCLING

SPECIAL INFORMATION OPERATION

- The appliance may be used by children aged 3 and older and persons with reduced physical, sensory or mental capabilities or a lack of experience and know-how, provided that they are supervised or they have been instructed on how to use the appliance safely and have understood the resulting risks. Children must never play with the appliance. Children must never clean the appliance or perform user maintenance unless they are supervised.
- The tap can reach temperatures in excess of 60 °C. There is a risk of scalding at outlet temperatures in excess of 43 °C.
- Ensure the appliance can be separated from the power supply by an isolator that disconnects all poles with at least 3 mm contact separation.
- The specified voltage must match the mains voltage.
- The appliance must be connected to earth.
- The appliance must be permanently connected to fixed wiring.
- Secure the appliance as described in chapter “Installation / Installation”.
- Observe the maximum permissible pressure (see chapter “Installation / Specification / Data table”).
- The specific water resistivity of the mains water supply must not be undershot (see chapter “Installation / Specification / Data table”).
- Drain the appliance as described in chapter “Installation / Maintenance / Draining the appliance”.

1. General information

The chapters “Special Information” and “Operation” are intended for both the user and qualified contractors.

The chapter “Installation” is intended for qualified contractors.

Note
Read these instructions carefully before using the appliance and retain them for future reference.
Pass on the instructions to a new user if required.

1.1 Safety instructions

1.1.1 Structure of safety instructions

KEYWORD Type of risk
Here, possible consequences are listed that may result from failure to observe the safety instructions.
▶ Steps to prevent the risk are listed.

1.1.2 Symbols, type of risk

Symbol	Type of risk
	Injury
	Electrocution
	Burns (burns, scalding)

1.1.3 Keywords

KEYWORD	Meaning
DANGER	Failure to observe this information will result in serious injury or death.
WARNING	Failure to observe this information may result in serious injury or death.
CAUTION	Failure to observe this information may result in non-serious or minor injury.

1.2 Other symbols in this documentation

Note
General information is identified by the adjacent symbol.
▶ Read these texts carefully.

Symbol	Meaning
!	Material losses (appliance damage, consequential losses and environmental pollution)
	Appliance disposal

▶ This symbol indicates that you have to do something. The action you need to take is described step by step.

1.3 Units of measurement

Note
All measurements are given in mm unless stated otherwise.

2. Safety

2.1 Intended use

This appliance is intended for heating domestic hot water (DHW) or for reheating preheated water and can supply one or several draw-off points.

This appliance is intended for domestic use. It can be used safely by untrained persons. The appliance can also be used in a non-domestic environment, e.g. in a small business, as long as it is used in the same way.

Any other use beyond that described shall be deemed inappropriate. Observation of these instructions and of instructions for any accessories used is also part of the correct use of this appliance.

2.2 General safety instructions

CAUTION Burns
During operation, the tap can reach temperatures in excess of 60 °C.
There is a risk of scalding at outlet temperatures in excess of 43 °C.

CAUTION Burns
When operating the appliance with preheated water, e.g. from a solar thermal system, the DHW temperature may vary from the selected set temperature.

WARNING Injury
The appliance may be used by children aged 3 and older and persons with reduced physical, sensory or mental capabilities or a lack of experience and know-how, provided that they are supervised or they have been instructed on how to use the appliance safely and have understood the resulting risks. Children must never play with the appliance. Children must never clean the appliance or perform user maintenance unless they are supervised.

Material losses
The user should protect the appliance and its tap against frost.

2.3 Test symbols

See type plate on the appliance.

3. Appliance description

The electronically controlled instantaneous water heater maintains a constant outlet temperature up to its output limit, irrespective of the inlet temperature.

The appliance heats the water directly at the draw-off point, as soon as you turn on the hot water tap. The short pipe runs ensure that energy and water losses are minimal.

For the start flow rate, see chapter “Installation / Specification / Data table, On”.

The DHW output depends on the cold water temperature, the heating output, the flow rate and the selected set temperature.

Water will not be reheated if the maximum inlet temperature for reheating is exceeded.

DHW temperature

The DHW outlet temperature can be variably adjusted.

Temperature limit / Anti-scalding protection

The maximum outlet temperature for the appliance can be limited to 43 °C. For this, contact your local heating contractor.

Heating system

The bare wire heating system has a pressure-tested plastic casing. The heating system is suitable for (both) soft and hard water and is largely resistant to scale build-up. This heating system ensures rapid and efficient DHW availability.

Note
The appliance is equipped with an air detector that largely prevents damage to the heating system. If, during operation, air is drawn into the appliance, the appliance shuts down for one minute, thereby protecting the heating system.

4. Operation

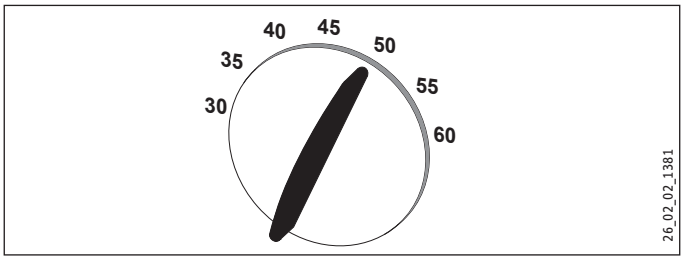

▶ Turn the temperature selector to the required position.

If the outlet temperature fails to reach the required level with the tap fully open and the temperature selector set to maximum, then more water is flowing through the appliance than can be heated by the heating element.

▶ Reduce the flow rate at the tap.

4.1 Recommended settings

Thermostatic valve

If the appliance is being operated with a thermostatic valve, we recommend setting the temperature on the appliance to maximum. The required temperature can then be set at the thermostatic valve.

Following an interruption to the water supply

Material losses
To ensure that the bare wire heating system is not damaged following an interruption to the water supply, the appliance must be restarted taking the following steps.

- ▶ Disconnect the appliance from the power supply by removing the fuses/tripping the MCBs.
- ▶ Open the tap for one minute until the appliance and its upstream cold water inlet line are free of air.
- ▶ Switch the mains power back ON again.

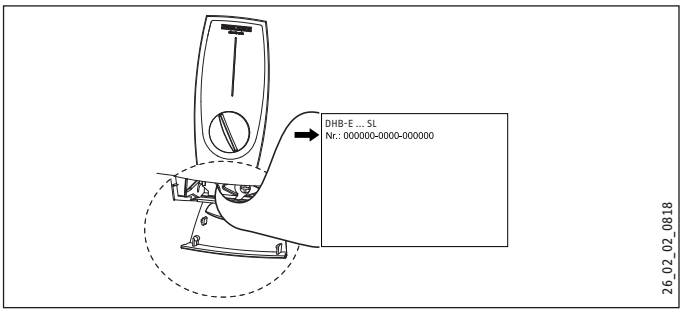

4.2 Temperature limit / Anti-scalding protection

The maximum outlet temperature for the appliance can be limited to 43 °C. For this, contact your local heating contractor.

5. Cleaning, care and maintenance

- ▶ Never use abrasive or corrosive cleaning agents. A damp cloth is sufficient for cleaning the appliance.
- ▶ Check the taps regularly. Limescale deposits at the tap outlets can be removed using commercially available descaling agents.

6. Troubleshooting

Problem	Cause	Remedy
The appliance will not start despite the DHW valve being fully open.	There is no power.	Check the fuses/MCBs in your fuse box/distribution panel.
	The aerator in the tap or the shower head is scaled up or contaminated.	Clean and/or descale the aerator or shower head.
When hot water is being drawn off, cold water flows for a short period.	The air sensor detects air in the water and briefly switches the heater off.	The appliance restarts automatically after 1 minute.
Required temperature > 45 °C is not achieved.	The water supply has been interrupted.	Vent the appliance and the cold water supply line (see chapter "Operation / Recommended settings / Following an interruption to the water supply").
	Cold water inlet temperature is > 45 °C.	Reduce the cold water inlet temperature.

If you cannot remedy the fault, notify your qualified contractor. To facilitate and speed up your request, provide the number from the type plate (000000-0000-000000).

INSTALLATION

7. Safety

Only a qualified contractor should carry out installation, commissioning, maintenance and repair of the appliance.

7.1 General safety instructions

We guarantee trouble-free function and operational reliability only if original accessories and spare parts intended for the appliance are used.

Material losses
Observe the maximum permissible inlet temperature (see chapter "Installation / Specification / Data table"). Higher temperatures may damage the appliance. The inlet temperature can be limited by means of a central thermostatic valve (see chapter "Installation / Appliance description / Accessories").

7.2 Instructions, standards and regulations

Note
Observe all applicable national and regional regulations and instructions.

- The IP 25 (hoseproof) rating can only be ensured with a correctly fitted cable grommet.
- The specific electrical resistance of the water must not fall below that stated on the type plate. In a linked water network, factor in the lowest electrical resistance of the water (see chapter “Installation / Specification / Data table”). Your water supply utility will advise you of the specific electrical resistance or conductivity of the water.

8. Appliance description

8.1 Standard delivery

The following are delivered with the appliance:
- Wall mounting bracket
- Installation template
- 2 twin connectors
- Cold water 3-way ball shut-off valve
- DHW tee
- Flat gaskets
- Strainer
- Flow limiter
- Plastic profile washer
- Plastic connection pieces / installation aid
- Cap and back panel guides

8.2 Accessories

Taps/valves
- MEKD mono lever kitchen pressure tap
- MEBD mono lever bath pressure tap

Plug G ½ A

If you use pressure taps for finished walls other than those recommended in the accessories, please use the plugs.

Installation set for finished walls
- Solder fitting - copper pipe for soldered connection Ø 12 mm
- Compression fitting - copper pipe
- Compression fitting - plastic pipe (suitable for Viega: Sanfix-Plus or Sanfix-Fosta)

Universal mounting frame
- Mounting frame with electrical connections

Pipe assembly for undersink appliances

You will need the undersink installation set if you make the water connections (G ⅜ A) at the top of the appliance.

Pipe assembly for offset installation

Use this pipe assembly set if you intend to offset the appliance by 90 mm downwards from the water connection.

Pipe assembly for replacing a gas water heater

You will need this pipe assembly set if the existing installation has gas water heater connections (cold water connection on the left-hand side, DHW connection on the right-hand side).

Pipe assembly DHB water plug-in couplings

Use the water plug-in couplings if the existing installation contains water plug-in connections from a DHB water heater.

Load shedding relay (LR 1-A)

The load shedding relay for installation in the distribution board provides priority control for the instantaneous water heater when other appliances, such as electric storage heaters, are being operated simultaneously.

ZTA 3/4 – Central thermostatic valve

Thermostatic valve for central premixing, for example when operating an instantaneous water heater with a solar thermal system.

9. Preparations

9.1 Installation site

Material losses
Install the appliance in a room free from the risk of frost.

▶ Always install the appliance vertically and near the draw-off point.

The appliance is suitable for undersink and oversink installation.

Undersink installation

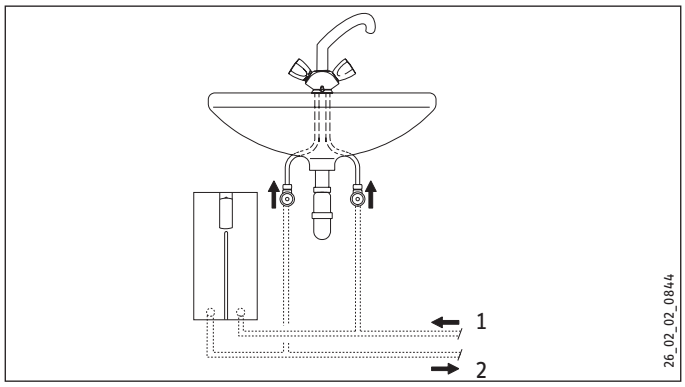

1 Cold water inlet
2 DHW outlet

Oversink installation

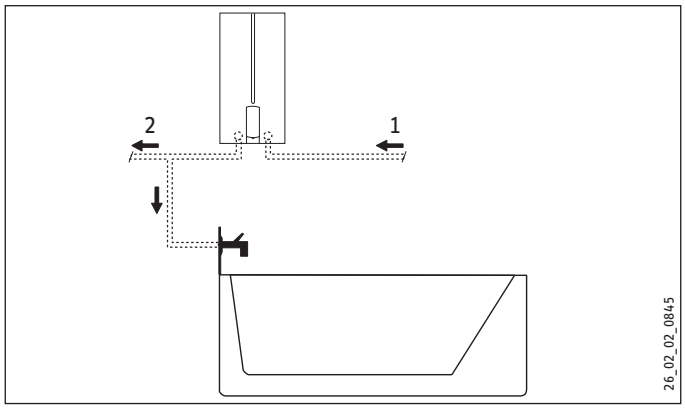

1 Cold water inlet
2 DHW outlet

Note
▶ Mount the appliance on the wall. The wall must have a sufficient load-bearing capacity.

9.2 Water installation

- No safety valve is required.

▶ Flush the water line thoroughly.

Taps/valves

Use suitable pressure taps/valves (see chapter “Installation / Appliance description / Accessories”). Open vented taps are not permitted.

Note
Never use the 3-way ball shut-off valve in the cold water inlet to reduce the flow rate. The 3-way ball shut-off valve is intended to shut off the appliance.

Permissible water line materials

- Cold water inlet line:
  Pipes made from galvanised steel, stainless steel, copper or plastic
- DHW outlet line:
  Pipes made from stainless steel, copper or plastic

Material losses
If plastic pipework is used, take into account the maximum inlet temperature and the maximum permissible pressure (see chapter "Installation / Specification / Data table").

Flow rate

▶ Ensure that the flow rate for switching on the appliance is achieved (see chapter “Installation / Specification / Data table”, On).

▶ Increase the water line pressure if the required flow rate is not achieved when the draw-off valve is fully open. If the flow rate is not reached despite increasing the pressure, remove the flow limiter and install the plastic profile washer.

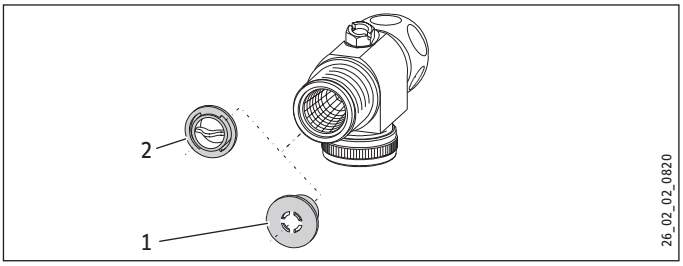

1 Flow limiter
2 Plastic profile washer

Note
For the thermostatic valve to function correctly, the flow limiter must not be replaced with the plastic profile washer.

9.3 Appliance with adjustable connected load

The appliance DHB-E 18/21/24 SL is set to 21 kW when delivered. If the appliance is to be installed with a different output, take the following steps:

- ▶ Plug in the coding card according to the selected output; for selectable output and fuse protection of the appliance, see chapter “Installation / Specification / Data table”.
- ▶ Tick the selected output on the type plate. Use a permanent marker for this.
- ▶ Install the flow limiter with an output corresponding to that of the appliance (see chapter “Installation / Specification / Data table”).

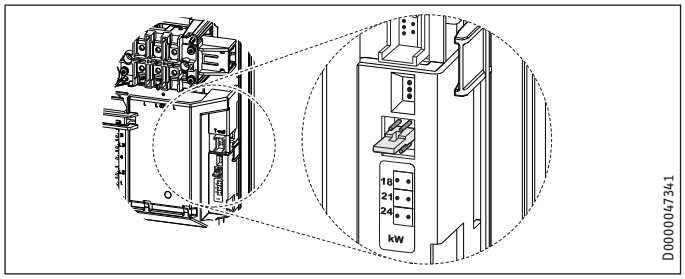

10. Installation

Standard installation

- Electrical connection from below on unfinished walls
- Water connection on unfinished walls

For further installation options, see chapter “Installation / Installation options”:

- Electrical connection from above on unfinished walls
- Electrical connection on finished walls
- Large conductor cross-section for electrical connection from below
- Connecting a load shedding relay
- Water installation on finished walls
- Water installation on finished walls with solder / compression fitting
- Water installation on finished walls; fitting the appliance cover
- Fitting the base part of the back panel with threaded fittings on finished walls
- Wall mounting bracket when replacing an appliance
- Installation with offset tiles
- Pivoting appliance cover
- Temperature limit / Anti-scalding protection

10.1 Standard installation

Opening the appliance

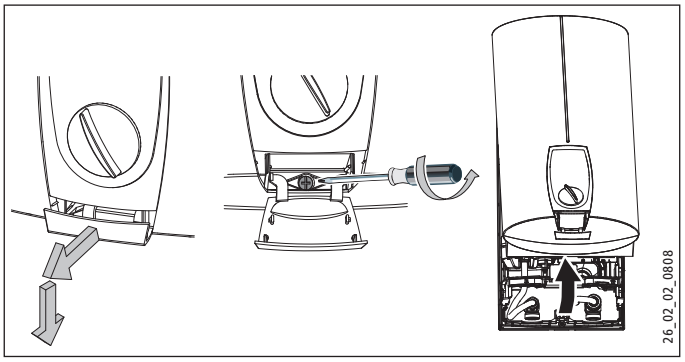

- ▶ Open the appliance by pulling the flap forwards and downwards, undo the screw and lift up the appliance cover.

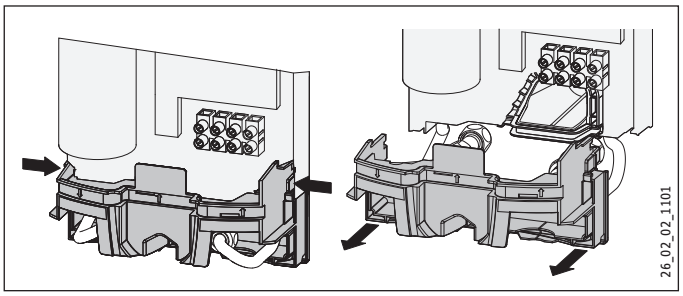

- ▶ Remove the back panel by pressing the two locking hooks and pulling the base part of the back panel forwards.

Preparing the power cable

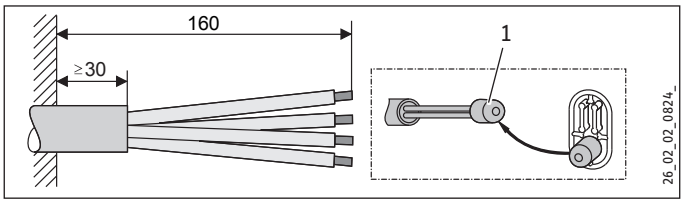

1 Installation aid

- ▶ Prepare the power cable.

Fitting the wall mounting bracket

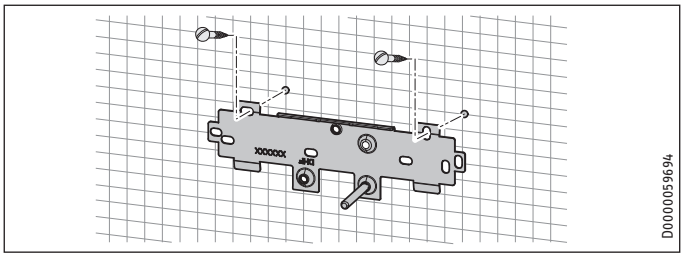

- ▶ Mark out the holes for drilling using the installation template. If the appliance is to be installed with water connections on finished walls, also mark out a fixing hole in the lower part of the template.
- ▶ Drill the holes and secure the wall mounting bracket at 2 points using suitable fixing materials (screws and rawl plugs are not part of the standard delivery).
- ▶ Fit the wall mounting bracket.

Making the water connection

Material losses
Carry out all water connection and installation work in accordance with regulations.

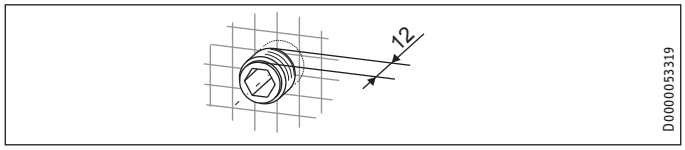

▶ Seal and insert the twin connectors.

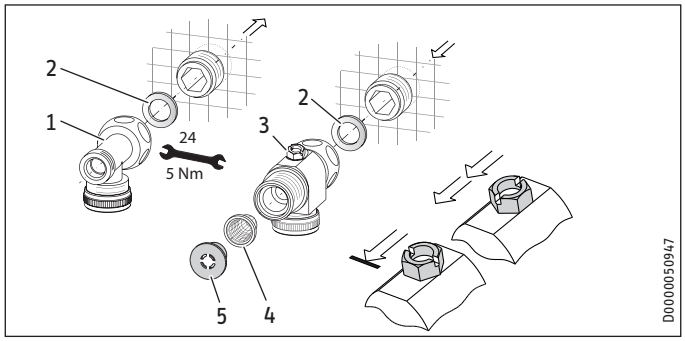

1 DHW with tee
2 Gasket
3 Cold water with 3-way ball shut-off valve
4 Strainer
5 Flow limiter or plastic profile washer (see chapter “Installation / Water installation / Flow rate”)

Note
A second flow limiter is provided with the DHB-E 18/21/24 SL. Install the appropriate flow limiter for output of the appliance (see "Flow rate regulator" in chapter "Installation / Specification / Data table"):
4.0 l/min = pink
7.5 l/min = blue
8.5 l/min = green

▶ Secure the tee and and 3-way ball shut-off valve, each with a flat gasket, to the twin connector.

Material losses
Never use the 3-way ball shut-off valve in the cold water inlet to reduce the flow rate.

Installing the appliance

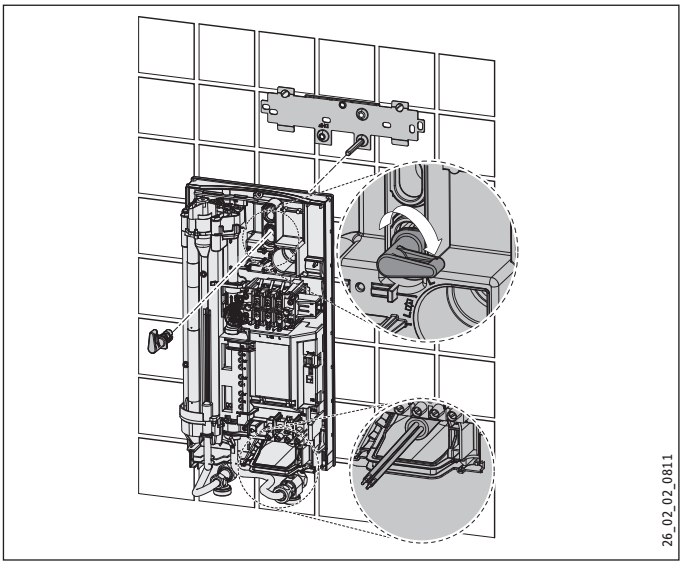

▶ For easier installation, push the cable grommet of the upper electrical connection into the back panel from behind.
▶ Remove the transport plugs from the water connections.
▶ Remove the fixing toggle from the upper part of the back panel.
▶ Route the power cable through the cable grommet from behind until the power cable rests against the cable sheath. Align the power cable.
Enlarge the hole in the cable grommet if the cross-section of the power cable is > 6 mm².
▶ Push the appliance over the threaded stud of the wall mounting bracket, so that it breaks through the soft seal. If necessary, use a screwdriver.
▶ Push the fixing toggle on to the threaded stud of the wall mounting bracket.
▶ Push the back panel firmly against the wall. Lock the fixing toggle by turning it 90° clockwise.

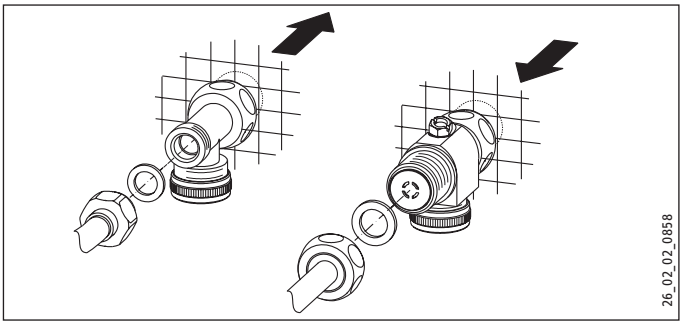

▶ Fit the pipes with flat gaskets onto the twin connectors.

Material losses
The strainer must be fitted for the appliance to function.
▶ When replacing an appliance, check whether the strainer is installed.

Making the electrical connection

WARNING Electrocution
Carry out all electrical connection and installation work in accordance with relevant regulations.

WARNING Electrocution
The connection to the power supply must be in the form of a permanent connection in conjunction with the removable cable grommet. Ensure the appliance can be separated from the power supply by an isolator that disconnects all poles with at least 3 mm contact separation.

WARNING Electrocution
Ensure that the appliance is earthed.

Material losses
Observe the type plate. The specified voltage must match the mains voltage.

- Connect the power cable to the mains terminal (see chapter "Installation / Specification / Wiring diagrams").

Fitting the base part of the back panel

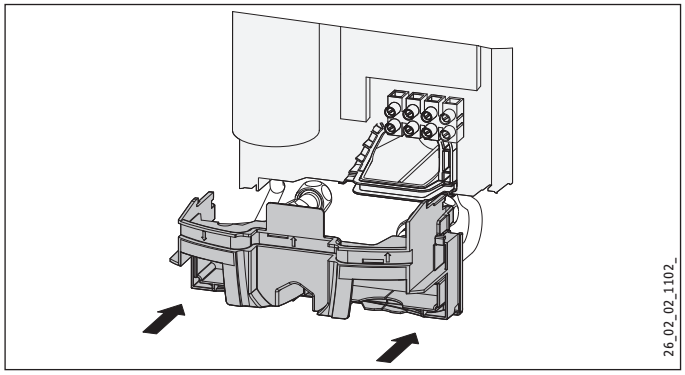

- Fit the base part into the back panel. Click the base part into place.
- Align the mounted appliance by loosening the fixing toggle, aligning the power supply and back panel, and then re-tightening the fixing toggle. If the back panel does not sit flush against the wall, you can secure the appliance at the bottom with an additional screw.

10.2 Completing the installation

- Open the 3-way ball shut-off valve or the shut-off valve in the cold water supply line.

11. Commissioning

WARNING Electrocution
Commissioning may only be carried out by a qualified contractor in accordance with safety regulations.

11.1 Initial start-up

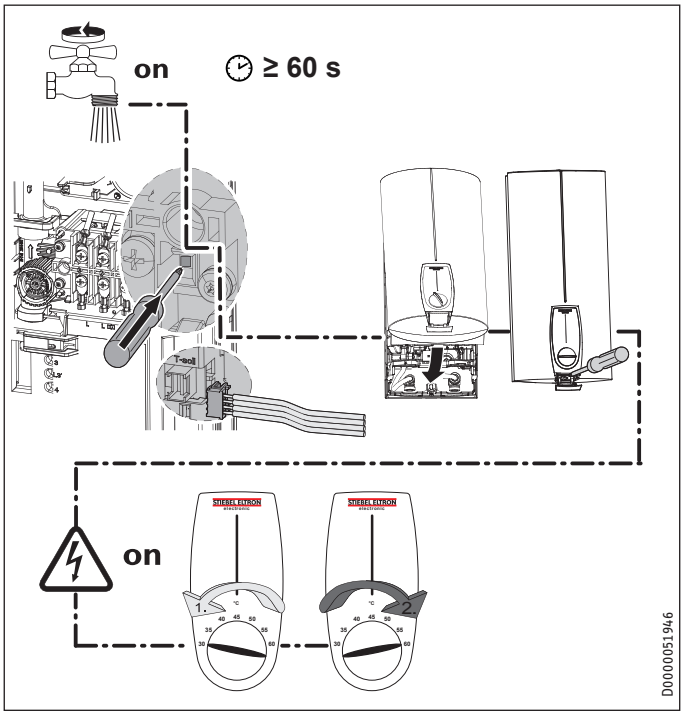

- Open and close all connected draw-off valves several times, until all air has been purged from the pipework and the appliance.
- Carry out a tightness check.
- Activate the safety pressure limiter at flow pressure by firmly pressing in the reset button (the appliance is delivered with the safety pressure limiter deactivated).
- Plug the set value transducer cable plug into the PCB.
- Fit the appliance cover. Check that the appliance cover is seated correctly.
- Secure the appliance cover with the screw.
- Switch the mains power ON.
- Calibrate the temperature. Turn the temperature selector fully clockwise then fully anti-clockwise.
- Remove the protective foil from the control fascia.
- Check the function of the appliance.

Appliance handover

- Explain the appliance function to users and familiarise them with its operation.
- Make the user aware of potential dangers, especially the risk of scalding.
- Hand over these instructions.

11.2 Recommissioning

Material losses
To ensure that the bare wire heating system is not damaged following an interruption to the water supply, the appliance must be restarted taking the following steps.

- ▶ Disconnect the appliance from the power supply by removing the fuses/tripping the MCBs.
- ▶ Open the tap for one minute until the appliance and its upstream cold water inlet line are free of air.
- ▶ Switch the mains power back ON again.

12. Shutdown

- ▶ Isolate all poles of the appliance from the power supply.
- ▶ Drain the appliance (see chapter “Installation / Maintenance / Draining the appliance”).

13. Installation options

13.1 Electrical connection from above on unfinished walls

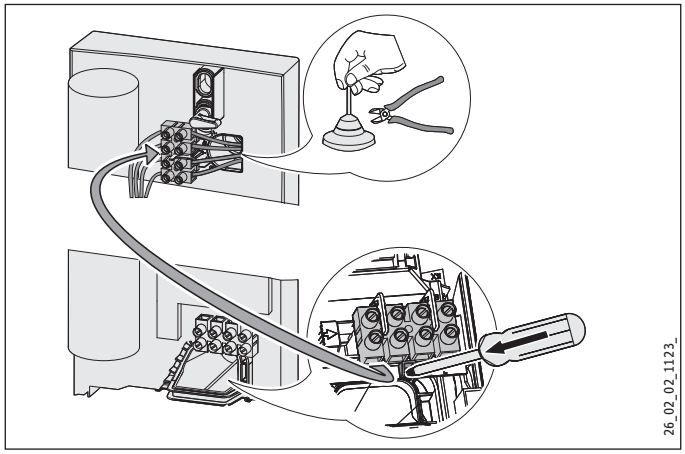

- ▶ Cut open the cable grommet for the power cable.
- ▶ Push down the locking hook for securing the mains terminal. Pull out the mains terminal.
- ▶ Reposition the mains terminal in the appliance from the bottom to the top. Secure the mains terminal by sliding it under the locking hook.
- ▶ Route the control wires under the wire guide.

13.2 Electrical connection on finished walls

Note
This type of connection changes the protection rating of the appliance.

- ▶ Change the type plate. Cross out "IP 25" and mark the box "IP 24". Please use a ballpoint pen to do this.

Material losses
If you break open the wrong knock-out in the back panel by mistake, you must use a new back panel.

- ▶ Cleanly cut or break out the required cable entry in the back panel (for positions, see chapter “Installation / Specification / Dimensions and connections”). Deburr sharp edges with a file if necessary.
- ▶ Route the power cable through the cable grommet. Connect the power cable to the mains terminal.

13.3 Large conductor cross-section for electrical connection from below

If you use cables with a large cross-section, you can fit the cable grommet after the appliance has been installed.

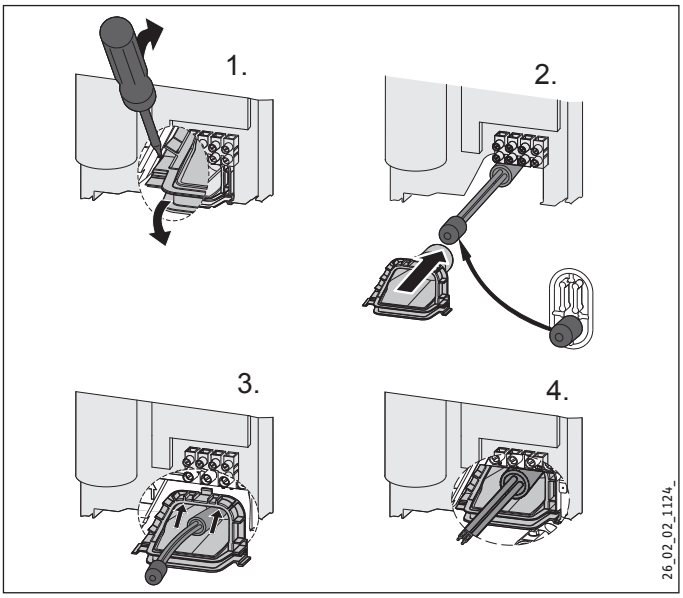

- ▶ Before installing the appliance, use a screwdriver to push out the cable grommet.
- ▶ Slide the cable grommet over the power cable. Use the installation aid supplied in the standard delivery. If the cross-section is > 6 mm², enlarge the hole in the cable grommet.
- ▶ Push the cable grommet into the back panel. Click the cable grommet into place.

13.4 Connecting a load shedding relay

When operating additional electric appliances, such as electric storage heaters, install a load shedding relay in the distribution board. The relay responds when the instantaneous water heater starts.

Material losses
Connect the phase that switches the load shedding relay to the indicated terminal of the mains terminal in the appliance (see chapter "Installation / Specification / Wiring diagrams").

13.5 Water installation on finished walls

Note
This type of connection changes the protection rating of the appliance.
- ▶ Change the type plate. Cross out "IP 25" and mark the box "IP 24". Please use a ballpoint pen to do this.

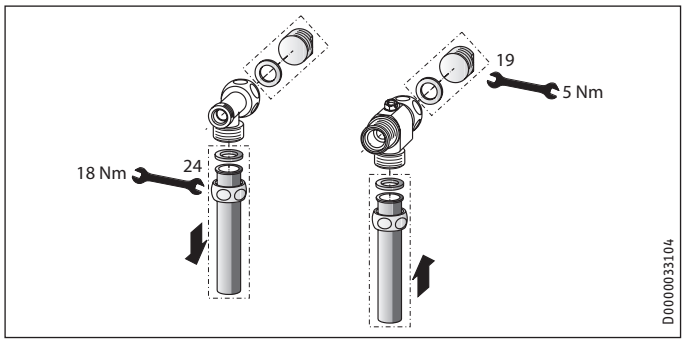

- ▶ Fit water plugs with gaskets to seal the in-wall connection. All taps listed under “Accessories” are supplied with plugs and gaskets as part of their standard delivery. For pressure taps other than those we recommend, plugs and gaskets can be ordered as “Accessories”.
- ▶ Fit a suitable pressure tap.
- ▶ Push the base part of the back panel under the connecting pipes of the tap and push it into the back panel.
- ▶ Secure the connection pipes to the tee and the 3-way ball shut-off valve.

13.6 Water installation on finished walls with solder / compression fitting

You can connect copper or plastic pipes using the accessories “solder fitting” or “compression fitting”.

With “solder fitting” with threaded connection for 12 mm copper pipes, proceed as follows:

- ▶ Push the union nuts over the connection pipes.
- ▶ Solder the inserts to the copper pipes.
- ▶ Push the base part of the back panel under the connecting pipes of the tap and push it into the back panel.
- ▶ Secure the connection pipes to the tee and the 3-way ball shut-off valve.

Note
Observe the tap manufacturer's instructions.

13.7 Water installation on finished walls; fitting the appliance cover

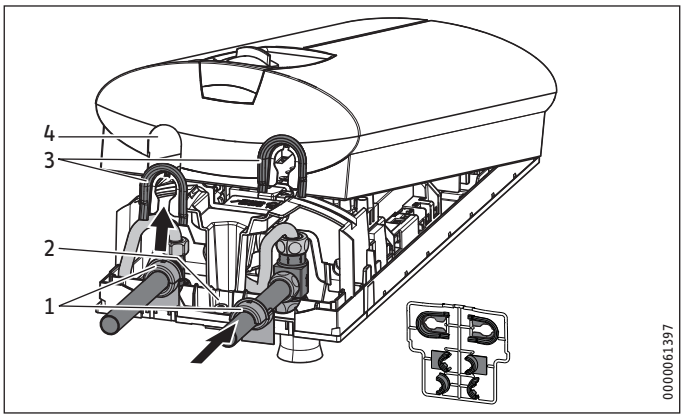

1 Back panel guide pieces
2 Screw
3 Cover guide pieces
4 Pipe aperture

- ▶ Cleanly break out the knock-out apertures in the appliance cover. If necessary, use a file.

Note
Use the cap guide pieces if the connection pipes are slightly offset.
- ▶ If the connection pipes are substantially offset, do not fit the back panel guide pieces.

- ▶ When installing connection pipes without offset, break off the tabs on the cover guide pieces.
- ▶ Click the cover guides into place in the knock-out apertures.
- ▶ Position the back panel guide pieces on the pipes. Push them together. Then push the guide pieces against the back panel as far possible.
- ▶ Secure the back panel at the bottom with a screw.
- ▶ If you use flexible water connection pipes, prevent pipe bends from twisting (bayonet connections in the appliance).

13.8 Fitting the base part of the back panel with threaded fittings on finished walls

If using threaded connections for finished walls, the base part of the back panel can also be installed after fitting the taps. To do this, carry out the following steps:

- ▶ Saw open the base part of the back panel.
- ▶ Fit the base part of the back panel by bending it out at the sides and guiding it over the pipes.
- ▶ Insert the connection pieces into the base part of the back panel from behind.
- ▶ Click the base part into place in the back panel.
- ▶ Secure the base part of the back panel with a screw.

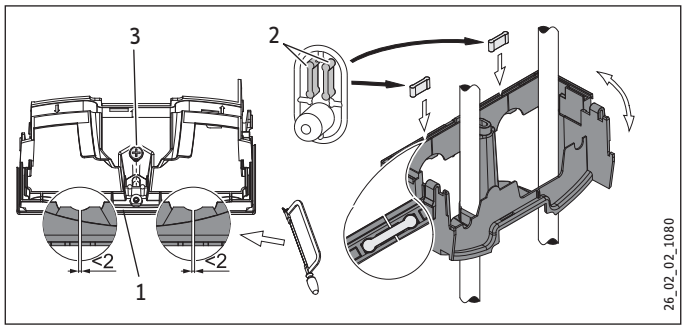

1 Base part of the back panel
2 Connection pieces delivered in the pack
3 Screw

13.9 Wall mounting bracket when replacing an appliance

An existing STIEBEL ELTRON wall mounting bracket may be used when replacing appliances (except for DHF instantaneous water heater).

▶ Break through the back panel of the appliance for the threaded stud on the installed wall mounting bracket.

Replacing a DHF instantaneous water heater

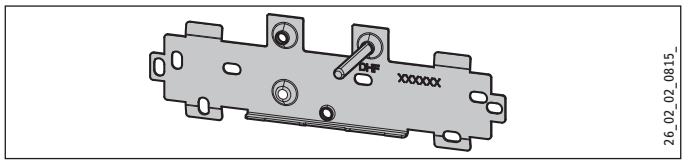

▶ Reposition the threaded stud on the wall mounting bracket (the stud has a self-tapping thread).

▶ Rotate the wall mounting bracket 180° and mount it on the wall (the DHF logo is then turned towards the reader).

13.10 Installation with offset tiles

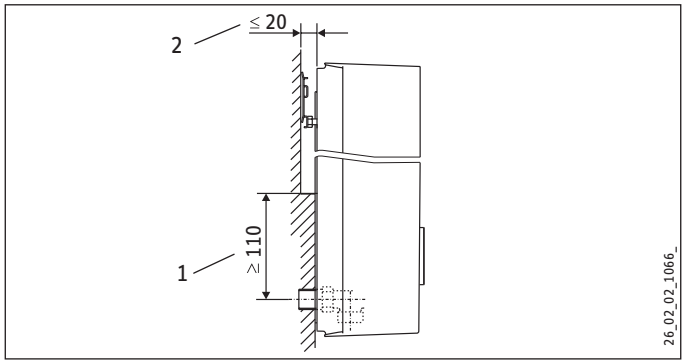

1 Minimum contact area of the appliance
2 Maximum tile offset

▶ Adjust the wall clearance. Lock the back panel in place using the fixing toggle (turn 90° clockwise).

13.11 Pivoting appliance cover

The appliance cover can be turned round for undersink installation.

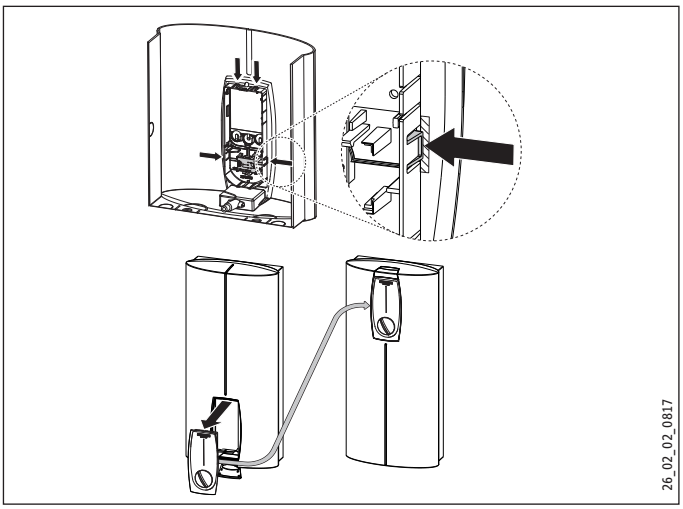

▶ Remove the programming unit from the appliance cover by pressing the locking hooks.

▶ Turn the appliance cover and click the programming unit back into place, ensuring that all locking hooks are engaged. For easier installation of the programming unit, press against the inner side of the appliance cover in the shaded area.

Material losses
Do not install a programming unit with faulty locking hooks. Otherwise the safety of the appliance cannot be guaranteed.

▶ Plug the set value transducer cable into the PCB (see chapter “Installation / Commissioning / Initial start-up”).

▶ Hook the appliance cover in at the top. Pivot the appliance cover down onto the back panel and press down until it engages audibly.

▶ Secure the appliance cover.

13.12 Temperature limit / Anti-scalding protection

The maximum temperature can be limited to 43 °C on the programming unit of the appliance cover. For this, the following steps are necessary:

▶ Remove the appliance cover.

▶ Remove the electronic PCB from the programming unit of the appliance cover. Be careful with the snap-on hooks.

▶ Move the plug from left to right (position “43 °C”).

▶ Refit the programming unit, ensuring the snap-on hooks click into place. Observe the positions of the push-button and shaft.

CAUTION Burns
If operating the appliance with preheated water, the set temperature limit and anti-scalding protection may be ineffective.

▶ In this case, restrict the temperature at the upstream central thermostatic valve (see chapter "Installation / Appliance description / Accessories").

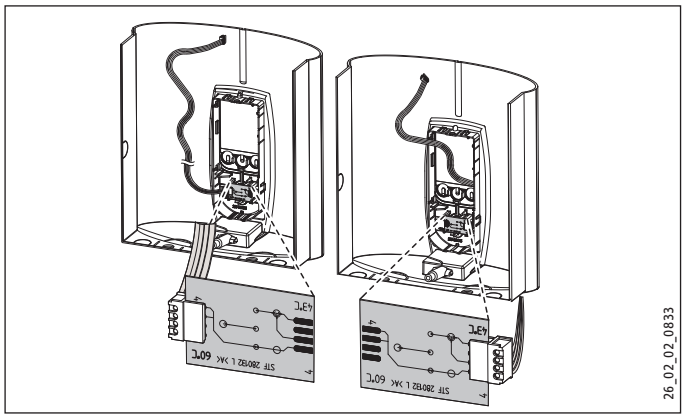

14. Troubleshooting

WARNING Electrocution
To test the appliance, it must be supplied with power.

Indication variants for diagnostic traffic light (LED)		
	Red	Illuminates in the event of a fault
	Yellow	Illuminates during heating operation
	Green	Flashing: Appliance is supplied with mains power

Fault / LED diagnostic traffic light signal		Cause	Remedy
	The appliance does not start.	The shower head / aerators are scaled up.	Descale or if necessary replace the shower head / aerators.
	The flow rate is too low.	The strainer in the appliance is dirty.	Clean the strainer.
	The set temperature is not achieved.	One phase down.	Check the fuse/MCB in your fuse box/distribution panel.
	The heater switches off.	The air detector senses air in the water. Heating output cuts out temporarily.	The appliance restarts after one minute.
	No hot water and no traffic light display.	The MCB/fuse has responded/blown.	Check the fuse/MCB in your fuse box/distribution panel.
		The safety pressure limiter has tripped.	Remove the cause of the fault (e.g. faulty pressure flush).
			Protect the heating system against overheating by opening a draw-off valve downstream from the appliance for one minute. This depressurises and cools down the heating system.
			Activate the safety pressure limiter at flow pressure by pressing the reset button, also see chapter "Installation / Commissioning / Initial start-up".
		The PCB is faulty.	Check the PCB and replace if necessary.
	Traffic light display: Green flashing No hot water at flow rate > 3 l/min.	Flow sensor DFE is not plugged in.	Re-insert the flow sensor plug.
		Flow sensor DFE is faulty.	Check the flow sensor and replace if necessary.
	The set temperature is not achieved.	The set value transducer or connecting cable is faulty, or the connecting cable is not attached.	Attach the connecting cable; replace the set value transducer if required.
		Temperature limiting is enabled.	Disable temperature limiting.
	Traffic light display: Yellow constantly on; green flashing No hot water at flow rate > 3 l/min.	The high limit safety cut-out has responded or suffered a lead break.	Check the high limit safety cut-out and replace if necessary.
		The heating system is faulty.	Check the resistance of the heater and replace if necessary.
		The PCB is faulty.	Check the PCB and replace if necessary.
	Traffic light display: Yellow constantly on; green flashing	The outlet sensor is faulty.	Check the connection and replace the outlet sensor if necessary.
	Set temperature is not achieved.	Appliance is operating at its output limit.	Reduce the flow rate. Install the flow limiter.
	Traffic light display: Red constantly on; green flashing	The outlet sensor is faulty.	Check the connection and replace the outlet sensor if necessary.
	No hot water	The cold water sensor is faulty.	Check the PCB and replace if necessary.
	Required temperature > 45 °C not reached.	The cold water inlet temperature exceeds 45 °C.	Reduce the cold water inlet temperature to the appliance.

15. Maintenance

WARNING Electrocution
Before any work on the appliance, ensure omnipolar disconnection from the power supply.

Draining the appliance

The appliance can be drained for maintenance work.

WARNING Burns
Hot water may escape when you drain the appliance.

- ▶ Close the 3-way shut-off valve or the shut-off valve in the cold water supply line.
- ▶ Open all draw-off valves.
- ▶ Undo the water connections on the appliance.
- ▶ If dismantled, store the appliance in a room free from the risk of frost, as water residues remaining inside the appliance can freeze and cause damage.

Cleaning the strainer

If contaminated, clean the strainer in the threaded cold water fitting. Close the 3-way shut-off valve or the shut-off valve in the cold water supply line before removing, cleaning and refitting the strainer.

16. Specification

16.1 Dimensions and connections

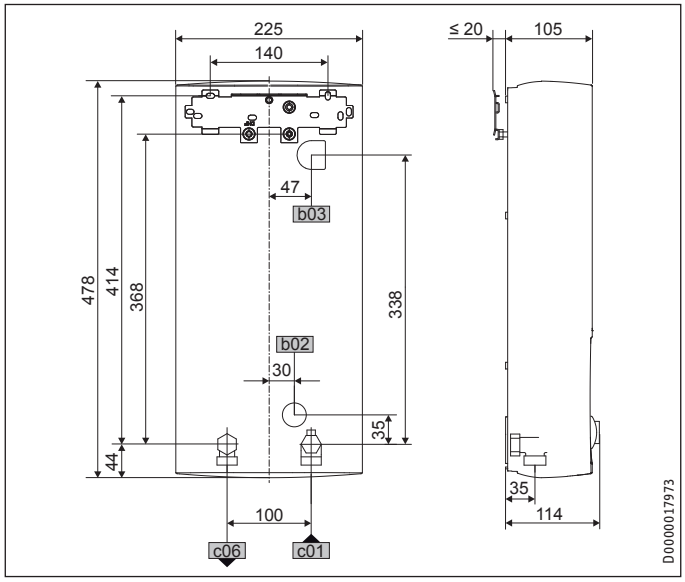

			DHB-E SLi
b02	Entry for cables I		
b03	Entry for cables II		
c01	Cold water inlet	Male thread	G 1/2 A
c06	DHW outlet	Male thread	G 1/2 A

Alternative connection options

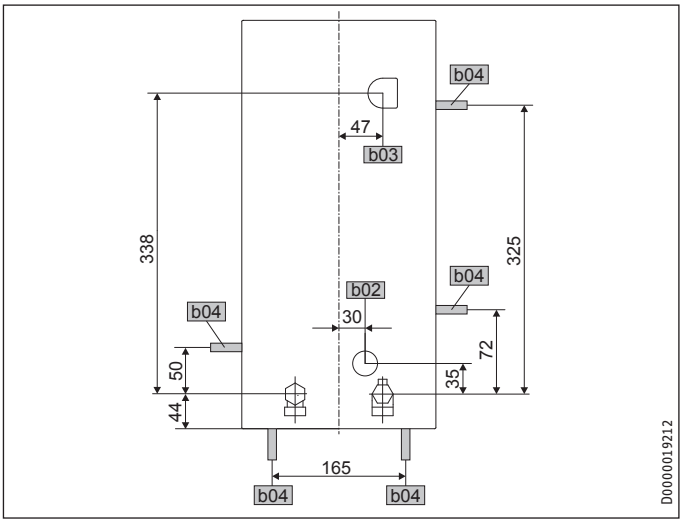

		DHB-E SLi
b02	Entry for cables I	
b03	Entry for cables II	
b04	Entry for cables III	

16.2 Wiring diagram

3/PE ~ 380-415 V

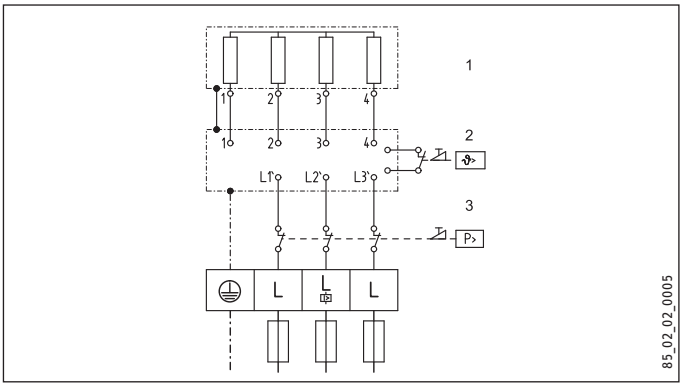

1 Heater
2 High limit safety cut-out
3 Safety pressure limiter

Priority control with LR 1-A

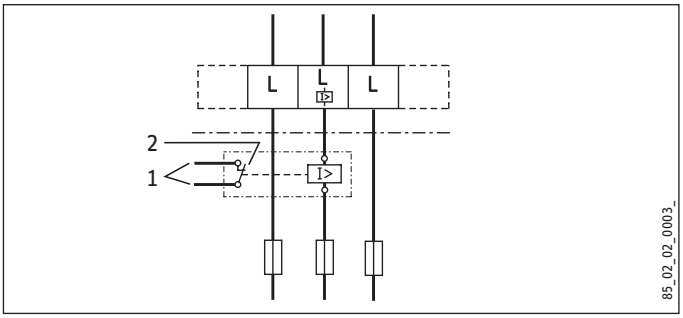

1 Control cable to the contactor of the second appliance (e.g. electric storage heater).
2 Control contact opens when switching the instantaneous water heater on.

16.3 DHW output

The DHW output is subject to the mains voltage, the appliance's connected load and the cold water inlet temperature. The rated voltage and rated output can be found on the type plate (see chapter "Operation / Troubleshooting").

Connected load in kW			38 °C DHW output in l/min.			
Rated voltage			Cold water inlet temperature			
380 V	400 V	415 V	5 °C	10 °C	15 °C	20 °C
10,1			4,4	5,2	6,3	8,0
	11		4,8	5,6	6,8	8,7
12,2			5,3	6,2	7,6	9,7
	13,5		5,8	6,9	8,4	10,7
		14,5	6,3	7,4	9,0	11,5
16,2			7,0	8,3	10,1	12,9
	18		7,8	9,2	11,2	14,3
		19,4	8,4	9,9	12,0	15,4
16,2			7,0	8,3	10,1	12,9
19			8,2	9,7	11,8	15,1
21,7			9,4	11,1	13,5	17,2
	18		7,8	9,2	11,2	14,3
	21		9,1	10,7	13,0	16,7
	24		10,4	12,2	14,9	19,0
		19,4	8,4	9,9	12,0	15,4
		22,6	9,8	11,5	14,0	17,9
		25,8	11,2	13,2	16,0	20,5
24,4			10,6	12,4	15,2	19,4
	27		11,7	13,8	16,8	21,4

Connected load in kW			50 °C DHW output in l/min.			
Rated voltage			Cold water inlet temperature			
380 V	400 V	415 V	5 °C	10 °C	15 °C	20 °C
10,1			3,2	3,6	4,1	4,8
	11		3,5	3,9	4,5	5,2
12,2			3,9	4,4	5,0	5,8
	13,5		4,3	4,8	5,5	6,4
		14,5	4,6	5,2	5,9	6,9
16,2			5,1	5,8	6,6	7,7
	18		5,7	6,4	7,3	8,6
		19,4	6,2	6,9	7,9	9,2
16,2			5,1	5,8	6,6	7,7
19			6,0	6,8	7,8	9,0
21,7			6,9	7,8	8,9	10,3

Connected load in kW			50 °C DHW output in l/min.			
Rated voltage			Cold water inlet temperature			
380 V	400 V	415 V	5 °C	10 °C	15 °C	20 °C
	18		5,7	6,4	7,3	8,6
	21		6,7	7,5	8,6	10,0
	24		7,6	8,6	9,8	11,4
		19,4	6,2	6,9	7,9	9,2
		22,6	7,2	8,1	9,2	10,8
		25,8	8,2	9,2	10,5	12,3
24,4			7,7	8,7	10,0	11,6
	27		8,6	9,6	11,0	12,9

16.4 Application areas / conversion table

Specific electrical resistance and specific electrical conductivity (see chapter "Installation / Data table").

Standard specification at 15 °C			20 °C			25 °C		
Resistance ρ ≥	Conductivity σ ≤		Resistance ρ ≥	Conductivity σ ≤		Resistance ρ ≥	Conductivity σ ≤	
Ωcm	mS/m	µS/cm	Ωcm	mS/m	µS/cm	Ωcm	mS/m	µS/cm
900	111	1111	800	125	1250	735	136	1361
1000	100	1000	890	112	1124	815	123	1227
1100	91	909	970	103	1031	895	112	1117
1200	83	833	1070	93	935	985	102	1015
1300	77	769	1175	85	851	1072	93	933

16.5 Pressure drop

Taps/valves

Tap pressure drop at a flow rate of 10 l/min		
Mono lever mixer tap, approx.	MPa	0.04 - 0.08
Thermostatic valve, approx.	MPa	0.03 - 0.05
Shower head, approx.	MPa	0.03 - 0.15

Sizing the pipework

When calculating the size of the pipework, an appliance pressure drop of 0.1 MPa is recommended.

16.6 Details on energy consumption

The product data complies with EU regulations relating to the Directive on the ecological design of energy related products (ErP).

		DHB-E 11 SLi	DHB-E 13 SLi	DHB-E 18 SLi 25 A	DHB-E 18/21/24 SLi	DHB-E 27 SLi
		232013	232014	232015	232016	232017
Manufacturer		STIEBEL ELTRON	STIEBEL ELTRON	STIEBEL ELTRON	STIEBEL ELTRON	STIEBEL ELTRON
Load profile		S	S	S	S	S
Energy efficiency class		A	A	A	A	A
Annual power consumption	kWh	472	472	477	477	481
Energy conversion efficiency	%	39	39	39	39	39
Default temperature setting	°C	60	60	60	60	60
Sound power level	dB(A)	15	15	15	15	15
Special information on measuring efficiency		None	None	None	Data at Pmax.	None

ENGLISH

Specification

16.7 Data table

		DHB-E 11 SLi		DHB-E 13 SLi			DHB-E 18 SLi 25 A			DHB-E 18/21/24 SLi			DHB-E 27 SLi	
		232013		232014			232015			232016			232017	
Electrical data														
Rated voltage	V	380	400	380	400	415	380	400	415	380	400	415	380	400
Rated output	kW	10.1	11	12.2	13.5	14.5	16.2	18	19.4	16.2/19/21.7	18/21/24	19.4/22.6/25.8	24.4	27
Rated current	A	15.4	16	18.5	19.5	20.2	24.7	26	27	27.6/29.5/33.3	29/31/35	30.1/32.2/36.3	37.1	39
MCB/fuse rating	A	16	16	20	20	20	25	25	32	32/32/35	32/32/35	32/32/40	40	40
Phases			3/PE			3/PE			3/PE			3/PE		3/PE
Frequency	Hz	50/60	50/60	50/60	50/60	50/-	50/60	50/60	50/-	50/60	50/60	50/-	50/-	50/-
Specific resistance $\rho_{15} \geq$ (at ϑcold ≤25 °C)	Ω cm	900	900	900	900	1000	900	900	1000	900	900	1000	900	900
Specific conductivity $\sigma_{15} \leq$ (at ϑcold ≤25 °C)	µS/cm	1111	1111	1111	1111	1000	1111	1111	1000	1111	1111	1000	1111	1111
Specific resistance $\rho_{15} \geq$ (at ϑcold ≤45 °C)	Ω cm	1200	1200	1200	1200	1300	1200	1200	1300	1200	1200	1300	1200	1200
Specific conductivity $\sigma_{15} \leq$ (at ϑcold ≤45 °C)	µS/cm	833	833	833	833	770	833	833	770	833	833	770	833	833
Max. mains impedance at 50 Hz	Ω						0.379	0.360	0.347	0.284	0.270	0.260	0.254	0.241
Connections														
Water connection		G 1/2 A		G 1/2 A			G 1/2 A			G 1/2 A			G 1/2 A	
Application limits														
Max. permissible pressure	MPa	1		1			1			1			1	
Max. inlet temperature for reheating	°C	45		45			45			45			45	
Values														
Max. permissible inlet temperature	°C	60		60			60			60			60	
On	l/min	>3.0		>3.0			>3.0			>3.0			>3.0	
Flow rate for pressure drop	l/min	3.1		3.9			5.2			5.2/6.0/6.9			7.7	
Pressure drop at flow rate	MPa	0.07 (0.02 without DMB)		0.11 (0.03 without DMB)			0.08 (0.06 without DMB)			0.08/0.10/0.13 (0.06/0.08/0.10 without DMB)			0.16 (0.12 without DMB)	
Flow rate limit at	l/min	4.0		4.0			7.5			7.5/7.5/8.5			8.5	
DHW delivery	l/min	5.6		6.9			9.2			9.2/10.7/12.3			13.8	
$\Delta\vartheta$ on delivery	K	28		28			28			28			28	
Hydraulic data														
Nominal capacity	l	0.4		0.4			0.4			0.4			0.4	
Versions														
Connected load adjustable		-		-			-			X			-	
Temperature setting range	°C	30 - 60		30 - 60			30 - 60			30 - 60			30 - 60	
Safety category		1		1			1			1			1	
Insulating block		Plastic		Plastic			Plastic			Plastic			Plastic	
Heating system heat generator		Bare wire		Bare wire			Bare wire			Bare wire			Bare wire	
Cover and back panel		Plastic		Plastic			Plastic			Plastic			Plastic	
Colour		White		White			White			White			White	
IP rating		IP25		IP25			IP25			IP25			IP25	
Dimensions														
Height	mm	478		478			478			478			478	
Width	mm	225		225			225			225			225	
Depth	mm	105		105			105			105			105	
Weights														
Weight	kg	3.6		3.6			3.6			3.6			3.6	

Guarantee

The guarantee conditions of our German companies do not apply to appliances acquired outside of Germany. In countries where our subsidiaries sell our products a guarantee can only be issued by those subsidiaries. Such guarantee is only granted if the subsidiary has issued its own terms of guarantee. No other guarantee will be granted.

We shall not provide any guarantee for appliances acquired in countries where we have no subsidiary to sell our products. This will not affect warranties issued by any importers.

Environment and recycling

We would ask you to help protect the environment. After use, dispose of the various materials in accordance with national regulations.